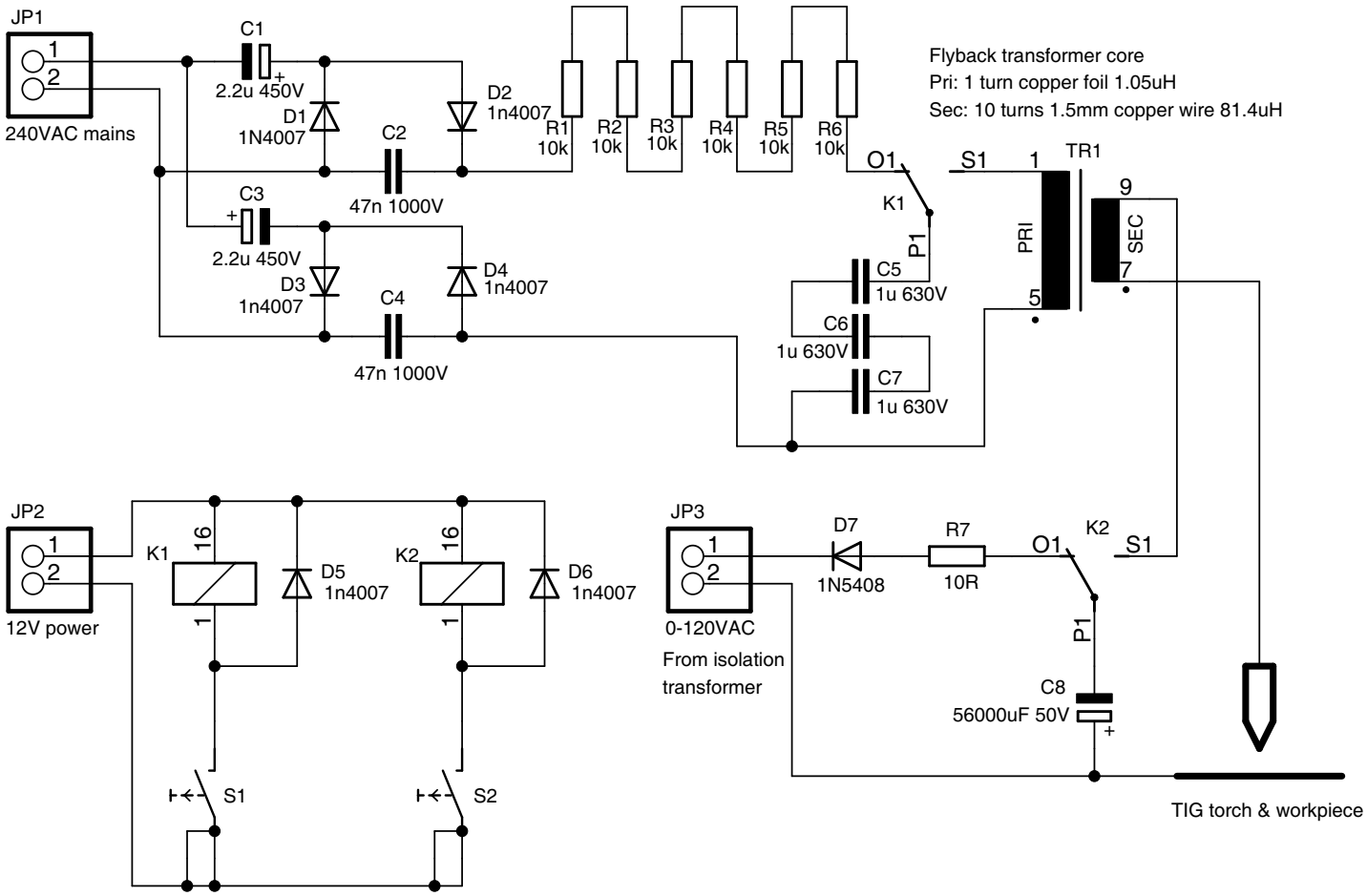
JP1
1
2
240VAC mains
C1
2.2u 450V
D1
1N4007
C2
47n 1000V
D2
1n4007
C3
2.2u 450V
D3
1n4007
C4
47n 1000V
D4
1n4007
R1
10k
R2
10k
R3
10k
R4
10k
R5
10k
R6
10k
Flyback transformer core
Pri: 1 turn copper foil 1.05uH
Sec: 10 turns 1.5mm copper wire 81.4uH
O1
K1
P1
S1
1
TR1
9
PRI
SEC
7
5
C5
1u 630V
C6
1u 630V
C7
1u 630V
JP2
1
2
12V power
K1
16
1
D5
1n4007
K2
16
1
D6
1n4007
S1
S2
JP3
1
2
0-120VAC
From isolation
transformer
D7
1N5408
R7
10R
O1
K2
S1
P1
C8
56000uF 50V
TIG torch & workpiece