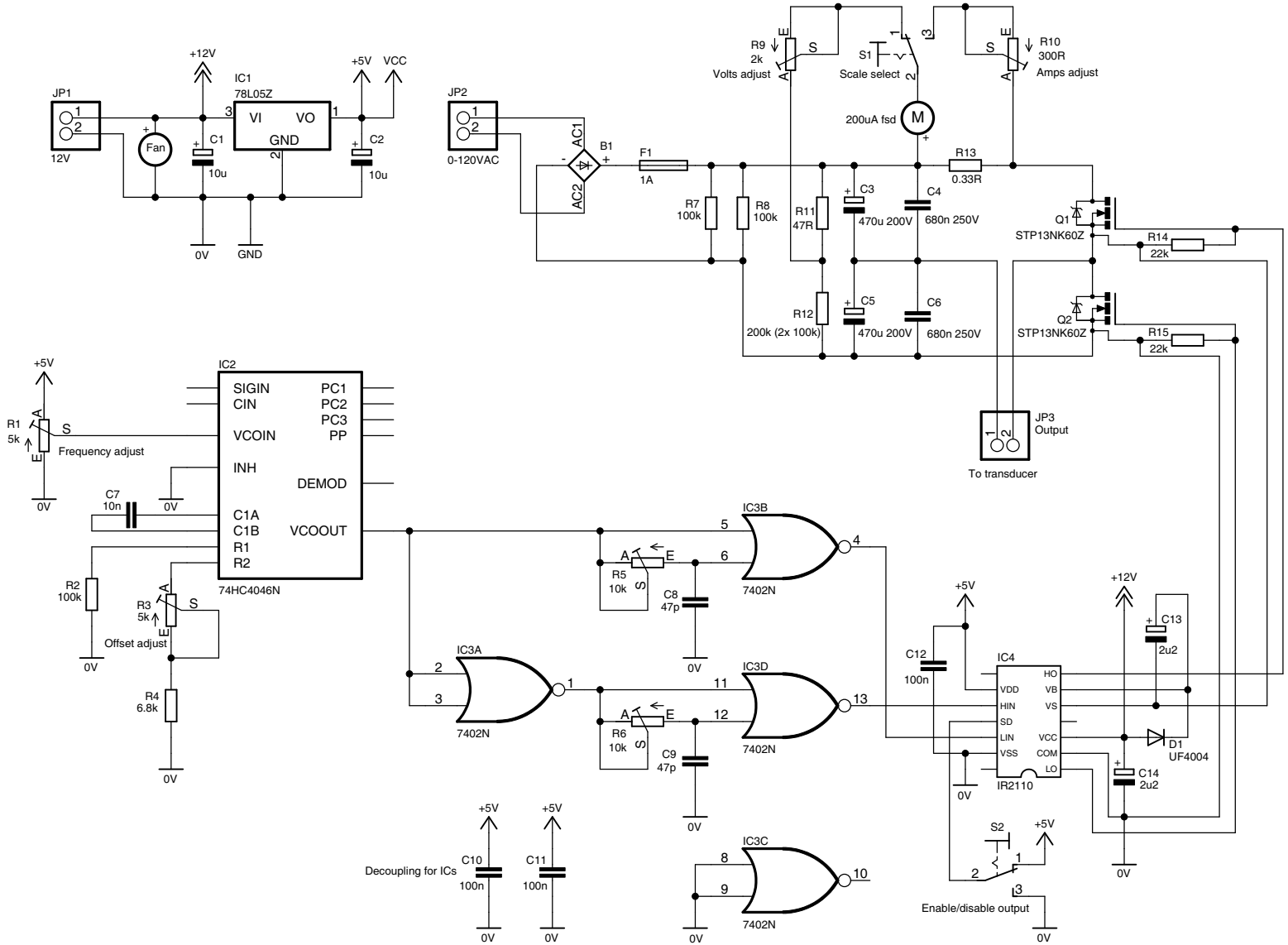
JP1
12V
Fan
+12V
C1
10u
IC1
78L05Z
VI
VO
GND
0V
GND
+5V
VCC
C2
10u
JP2
0-120VAC
AC1
AC2
B1
F1
1A
R7
100k
R8
100k
R9
2k
Volts adjust
S1
Scale select
200uA fsd
M
R10
300R
Amps adjust
R13
0.33R
R11
47R
C3
470u 200V
C4
680n 250V
R12
200k (2x 100k)
C5
470u 200V
C6
680n 250V
Q1
STP13NK60Z
Q2
STP13NK60Z
R14
22k
R15
22k
JP3
Output
To transducer
IC2
SIGIN
CIN
VCOIN
INH
C1A
C1B
R1
R2
PC1
PC2
PC3
PP
DEMOD
VCOOUT
74HC4046N
R1
5k
Frequency adjust
C7
10n
R2
100k
R3
5k
Offset adjust
R4
6.8k
IC3A
7402N
IC3B
7402N
IC3C
7402N
IC3D
7402N
R5
10k
C8
47p
R6
10k
C9
47p
Decoupling for ICs
C10
100n
C11
100n
C12
100n
IC4
VDD
HIN
SD
LIN
VSS
HO
VB
VS
VCC
COM
LO
IR2110
C13
2u2
C14
2u2
D1
UF4004
S2
Enable/disable output