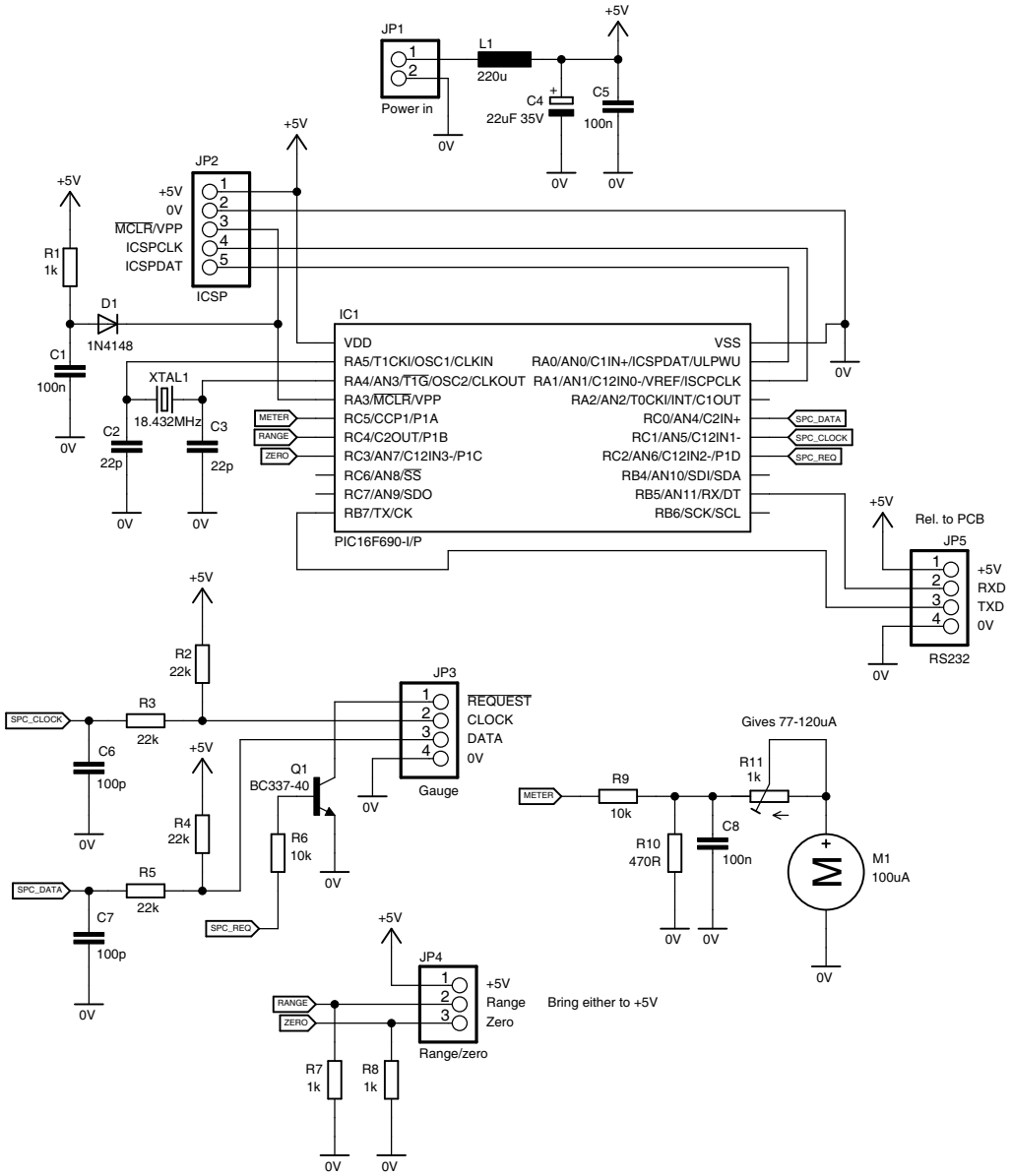
JP1
Power in
L1
220u
C4
22uF 35V
C5
100n
+5V
0V
JP2
ICSP
+5V
0V
MCLR/VPP
ICSPCLK
ICSPDAT
R1
1k
D1
1N4148
C1
100n
XTAL1
18.432MHz
C2
22p
C3
22p
IC1
VDD
RA5/T1CKI/OSC1/CLKIN
RA4/AN3/T1G/OSC2/CLKOUT
RA3/MCLR/VPP
RC5/CCP1/P1A
RC4/C2OUT/P1B
RC3/AN7/C12IN3-/P1C
RC6/AN8/SS
RC7/AN9/SDO
RB7/TX/CK
VSS
RA0/AN0/C1IN+/ICSPDAT/ULPWU
RA1/AN1/C12IN0-/VREF/ISCPCLK
RA2/AN2/T0CKI/INT/C1OUT
RC0/AN4/C2IN+
RC1/AN5/C12IN1-
RC2/AN6/C12IN2-/P1D
RB4/AN10/SDI/SDA
RB5/AN11/RX/DT
RB6/SCK/SCL
PIC16F690-I/P
METER
RANGE
ZERO
SPC_DATA
SPC_CLOCK
SPC_REQ
Rel. to PCB
JP5
+5V
RXD
TXD
0V
RS232
R2
22k
R3
22k
C6
100p
R4
22k
R5
22k
C7
100p
JP3
REQUEST
CLOCK
DATA
0V
Gauge
Q1
BC337-40
R6
10k
Gives 77-120uA
R9
10k
R10
470R
R11
1k
C8
100n
M1
100uA
JP4
+5V
Range
Zero
Range/zero
Bring either to +5V
R7
1k
R8
1k