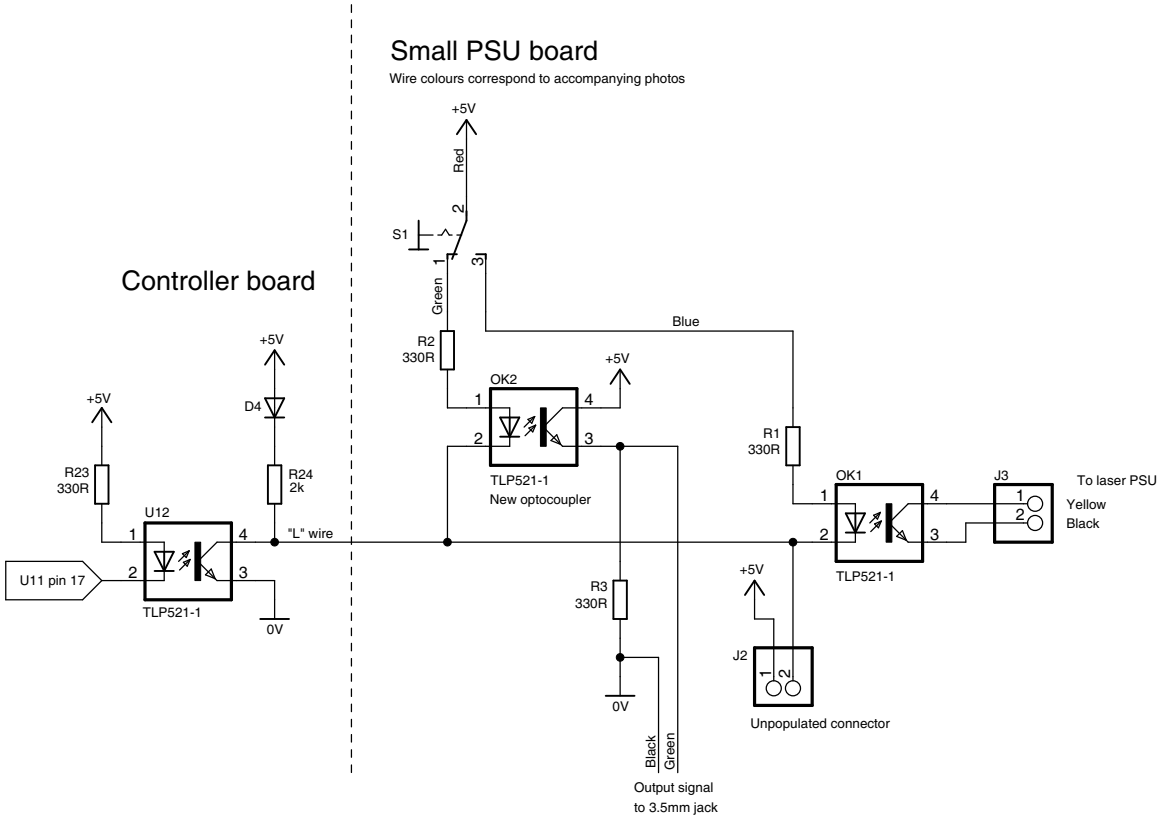
Small PSU board
Wire colours correspond to accompanying photos
Controller board
+5V
Red
S1
Green
Blue
R2
330R
OK2
TLP521-1
New optocoupler
R1
330R
OK1
TLP521-1
J3
To laser PSU
Yellow
Black
R23
330R
U12
TLP521-1
U11 pin 17
"L" wire
D4
R24
2k
0V
R3
330R
J2
Unpopulated connector
Black
Green
Output signal
to 3.5mm jack